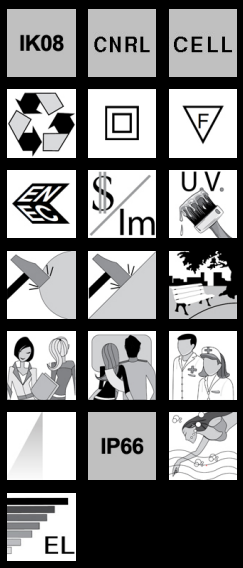

1609 Box 1 - in stainless steel

Housing: Rectangular in f.g. nylon, grey (RAL 7035), vandal-resistant, UV-stabilized (part to be recessed into wall)
Frame: In AISI 316 stainless steel, ideal for seaside areas too.
Diffuser: In tempered glass resistant to thermal shocks and impact (UNI 7142 and British Standard 3193 tests).
Reflector: asymmetric in scored aluminium
Lampholder: In polycarbonate, with phosphor bronze contacts
Electric gear: 230V/50Hz power supply. Hard wire, 0.50 sqmm cross-section. 2P terminal block with maximum allowed lead cross-section of 2.5 mm2.
Equipment: Rubber gasket. With polycarbonate gear tray
Regulations: Produced according to applicable EN 60598-1/CEI 34-21 standards, IP65IK08 degree of protection according to EN 60529 standards. This product can be installed on normally inflammable surfaces. Double insulation class.

Download

DXF 2D
- 1609.dxf

Montaggi
- box1.dxf
- box 1.pdf

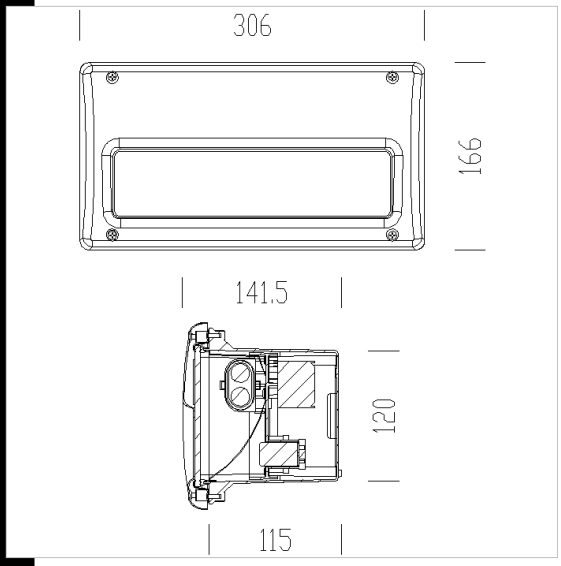

Code	Gear	Kg	Watt	Base	Lamps	Colour
431765-00	CNR-L	2,17	FLC 1x18L	2G11	1200lm-4000K-Ra 1b	STAINLESS STEEL
431765-08	CELL	2,17	FLC 1x18L	2G11	1200lm-4000K-Ra 1b	STEEL