info@disano.it - http://www.disano.it

1186 Forum - XL indoor High Performance

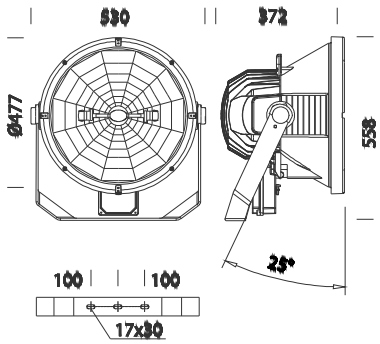

Code	Gear	Kg	Colour	Dimensions	lamp
412592-00	S	15.00	graphite	530x295x588	JM-TM 1000-G22
412593-00	S	15.00	graphite	530x295x588	JM-TS 2000 HO-SB-by wire

Housing/frame: In die-cast aluminium, with cooling fins.
Reflector: In 99.98 aluminium, anodized and polished, with fin for recovery of unused light.
Diffuser: Tempered glass, 5 mm thick, resistant to thermal shocks and impacts. (UNI7142 tests, 3193 British standard).
Painting: With polyester powder, colour graphite, resistant to corrosive and saline environments.
Lampholder: In ceramics with silver-plated contacts. Cable socket.
Electric gear: 230V/50Hz power supply. Silicone wire terminated with clamps in admiralty brass, with fiberglass braid, 2.5 sqmm cross section. Nylon 2P+T terminal block with maximum allowed lead cross section of 6 sqmm.
Equipment: Cable gland in f.g. nylon Ø 1/2 gas thread. Protective device: when the back cover is opened (hinge opening), the normally closed contact opens and cuts off supply to the fixture. Aiming visor. Anticondensation filter.
Standard igniter placed in a special box.
Regulations: Produced according to applicable EN60598-1 CEI 34-21 standards, IP66IK08 degree of protection according to EN 60529 standards. They have obtained the ENEC European Certificate of Conformity.
Additional gear: Hot restrike
Wind surface: 1400/2000 sqcm.
Hot restart with -99 subcode.