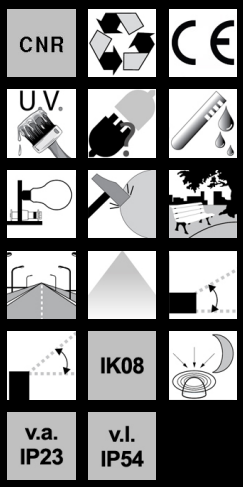

For roads, shop-lined and private - 1141 Sempione

Housing: In die-cast aluminium.
Reflector: In anodized, polished, pressed 99.85 aluminium, 6/8 µ thick, with flux recovery system.
Cover: Hinge-opening, vandal resistant and self-extinguishing polycarbonate, UV-stabilized.
Diffuser: In vandal resistant and V2 self-extinguishing polycarbonate, UV-stabilized. With latches.
Painting: With polyester fluid, grey, RAL 7035, upon chromate treatment, resistant to corrosion.
Lampholder: In ceramics, with silver-plated contacts. Socket E27; E40.
Electric gear: 230 V/50 Hz power supply. Silicone wire terminated with quick-connect clamps in admiralty brass. 2P+T nylon terminal block with maximum allowed lead cross-section of 4 sqmm.
Equipment: Silicone rubber gasket. Equipped with an anti-condensation filter. Lamp focus can be axial adjusted. Mast-top (Ø 60/76) or mast-arm (Ø 42/60) mounting. During maintenance the housing and diffuser remain attached for easy maintenance.
Standards: Produced according to applicable EN60598-1 CEI 34-21 standards, IP54IK08 degree of protection for lamp housing and IP43IK08 for electric gear box according to EN 60529 standards.
Wind surface: 1479 sqcm.
Non-polluting louvre, ideal for installation in zone 1 (UNI10819), with suitable inclination.

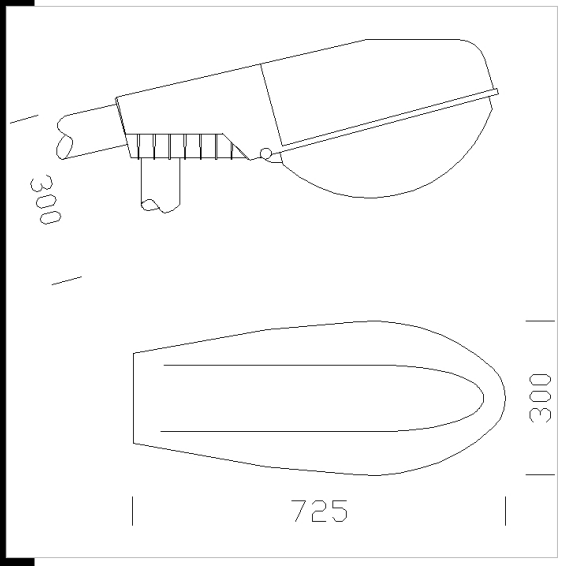

Download

DXF 2D
- 1141smp.dxf

Montaggi
- 1141_sempione.pdf

Code	Gear	Kg	Lumen-K-CRI	WTot	Base	Colour
313144-01	CNR	6.66	SAP-T 150-17200lm-2000K-Ra 4	169 W	E40	GREY

Accessories

- 49 corner bracket

- 74 double pole mount

- 48 wall barcket

- 72 wall mount

The reported luminous flux is the flux emitted by the light source with a tolerance of ± 10% compared to the indicated value. The W tot column indicates the total wattage absorbed by the system without exceeding 10% of the indicated