info@fosnova.it - http://www.fosnova.it

Mini Lex 1 - LED Bulb

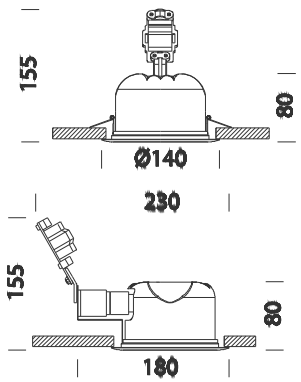

Code	Gear	Kg	Colour	Dimensions	W Tot	lamp
22172011-00	CLD CELL	0.60	white	0x0x80 Ø140	10	MASTERLED BULB-E27-806lm-2700K
22172071-00	CLD CELL	0.60	met. silver	0x0x80 Ø140	10	MASTERLED BULB-E27-806lm-2700K

Housing: In steel with frame steel.
Diffuser: glass
Lampholder: in polycarbonate with phosphor bronze contacts.
Equipment: Fixtures complete with stainless steel brackets to ensure a perfect fit against false ceilings
Regulations: Produced according to applicable EN60598 - CEI 34 - 21 standards. This product can be installed on normally inflammable surfaces
MASTERLED BULB 10W = 60W INC 15000h - 806lm - 3000K very well suited for the general lighting of public and reception spaces, especially lobbies, corridors or stairways, where lights stay on all day.