info@fosnova.it - http://www.fosnova.it

Corner ESALED

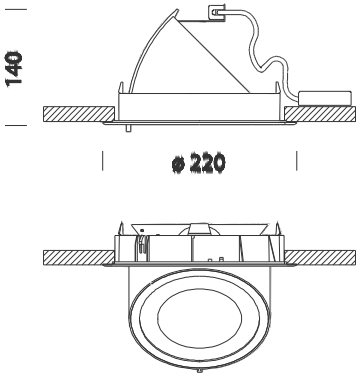

Code	Gear	Kg	Colour	Dimensions	W Tot	lamp
22087714-00	CLD CELL	1.00	white	0x0x140 Ø220	18	ESALED-1800lm-3000K - 10°-CRI 80
22087710-00	CLD CELL	1.00	white	0x0x140 Ø220	18	ESALED-2000lm-4000K - 10°-CRI 80
22087715-00	CLD CELL	1.00	white	0x0x140 Ø220	18	ESALED-1800lm-3000K - 25°-CRI 80
22087717-00	CLD CELL	1.00	white	0x0x140 Ø220	18	ESALED-2000lm-4000K - 25°-CRI 80
22087711-00	CLD CELL	1.00	white	0x0x140 Ø220	18	ESALED-1800lm-3000K - 40°-CRI 80
22087716-00	CLD CELL	1.00	white	0x0x140 Ø220	18	ESALED-1800lm-3000K - 40°-CRI 80
22087712-00	CLD CELL	1.00	white	0x0x140 Ø220	18	ESALED-2000lm-4000K - 40°-CRI 80
22087713-00	CLD CELL	1.00	white	0x0x140 Ø220	18	ESALED-2000lm-4000K - 60°-CRI 80
22087714-1241	CLD CELLDD	1.00	white	0x0x140 Ø220	18	ESALED-1800lm-3000K - 10°-CRI 80
22087715-1241	CLD CELLDD	1.00	white	0x0x140 Ø220	18	ESALED-1800lm-3000K - 25°-CRI 80
22087716-1241	CLD CELLDD	1.00	white	0x0x140 Ø220	18	ESALED-1800lm-3000K - 40°-CRI 80
22087717-1241	CLD CELLDD	1.00	white	0x0x140 Ø220	18	ESALED-1800lm-3000K - 60°-CRI 80

This line of recessed adjustable-angle floodlights is designed to address the growing need for lighting solutions in shopping centres and shop windows, where the luminous flux has to be directed according to the products displayed.
Regulations: Manufactured in accordance with standards EN60598 - CEI 34 -21. Degree of protection in accordance with standards EN60529.
ESALED: 4000K - 1050mA - 2000lm - CRI 80